CONTROL VALVE
AL 72-8021-GS1 / -GS3 / -GS4

Description - GS1

AL 72-8021-GS1 is a control valve designed for very accurate control, with wafer design for flanges PN 10-40. The valve is based on the principle of a sliding disc that opens and closes. The valve is available in stainless steel and carbon steel, DN 15-250 and for media temperatures of -60° C to + 350°C. Rangeabillity linear 1:40. The Kvs-value can be adjusted by exchanging only the sliding disc (which is also available in materials such as Stellite). Operation is done with pneumatic actuator and integrated digital or analog positions. Valve design provides a very low weight, low noise, short construction and stroke, and requires a much smaller actuator compared to a conventional control valve. The leakage for standard version is only 0.0001% of the Kv-value, which means that the valve can also be used as shut-off valve.

Type GS1

Versions - GS1

Version	Carbon - SST	SFC	STN2	STN3
Fixed disc	Stainless steel Stellite-coated			Stellite
Moving disc	Carbon	Stainless steel 1.4571 SFC-coated	Stainless steel 1.4571 Tribaloy-coated	Tribaloy
Dimension	DN 15-250		DN 15-150	DN 15, DN 25
Media temperature	-200°C - +450°C		-60°C - +300°C	-60°C - +530°C

Types - GS1 / GS3 / GS4

Page 1-3: AL 72-8021-GS1: DN 15-150 - PN 10 / PN 40
Page 4-9: AL 72-8021-GS3: DN 15-250 - PN 10 / PN 40 / PN 100
Page 10-13: AL 72-8021-GS4: DN 25-250 - PN 40 / PN 100 / PN 160

Ordering key - GS1

				1	2	3	4	5	6	7	8	9	10	11	12	13	14	15	16
AL 72-8021	/		V	G					M							Z			S
Valve type		DN																	

1. Type		2. Body version		3. Body material		4. Safety position		5. Actuator		6. Optional		7. Spring		8. Stem sealing	
G	Pneumatic control valve 8021	0	Wafer design, for flanges according to DIN 2632-2635 (PN 10 - PN 40)	0 1 3	Carbon steel 1.0570 / 1.0619 Stainless steel 1.4571 / 1.4581 Hastelloy	0 1	Spring closes Spring opens	3 4 5	Diaphragm 125 cm^2 Diaphragm 250 cm^2 Diaphragm 500 cm^2	M	States if further versions are quoted according to pos. 7-12	- 1 2 3 4 5 D	Standard 2 4 6 8 10 Spring set 0,2 - 1 bar	- 1	PTFE-packing self adjusting (standard) Bellow in 1.4571

9. Moving disc		10. Fixed disc		11. Kvs-value		12. Characteristics		13. Accesories		14. Positioner		15. Feedback		16. Special versions	
- 9 S	Carbon STN2 SFC	- 1	Stainless steel 1.4571 Stellit-coated STN2	- A 1 B 2 C 3 4 5 6 7 8 9	100 % (standard) Reduc. to 63% Reduc. to 40% Reduc. to 25% Reduc. to 16% Reduc. to 10% Reduc. to 6,3% Reduc. to 2,5% Reduc. to 1% Reduc. to 20% Reduc. to 12% Reduc. to 2% Reduc. to 0,4%	- 1	Linear Eqaul percentage	Z	States if further versions are quoted according to pos. 14-16	- 1 C * R T W	Without p/p positioner type 8047 digital positioner 8049 4-wire digital positioner 8049 2-wire digital positioner 8049 ASI-version digital positioner 8049 2-wire, Ex ia * Special version: (code C - S - - - P) Digital positioner 8049 4-wire with PID-regulator	- 0 5 D 6 R	Without 2 ind. limit switches M12x1 DC 10-30V 2 ind. limit switches M12x1 DC 10-55V 1 ind. limit switches M12x1 DC 10-30V 1 ind. limit switches M12x1 DC 10-55V RM3 feedback unit for 8049 4-wire 4-20 mA + 2 limit switches	S	Other special versions

CONTROL VALVE
AL 72-8021-GS1 / -GS3 / -GS4

Technical data - GS1

Design	Wafer design, dimensions acc. to DIN EN 558-1 serie 20 for flanges DIN EN 1092-1, form B
Size	DN 15 - 150 (DN 200-250 at request)
Pressure class	PN 40 (at request for flanges PN 10 to PN 25)
Media temperature	Body in carbon steel: -10°C - +300°C
	Body in stainless steel: -60°C - +350°C (300°C for SFC-unit)
Omgivningstemp.	-30°C - +100°C (see also limitations for the positioner)
Characteristic	With digital positioner 40:1 linear / 80:1 equal percentage
	With analog positioner: 30:1
Leakage rate (% of Kvs-value)	Carbon: < 0,0001
	STN2: < 0,001
	SFC < 0,0005

Part / Material specification - GS1

Part	Carbon steel	Stainless steel
Body	Carbon steel 1.0570 / 1.0619	Stainless steel 1.4571 / 1.4581
Head section	Carbon steel 1.0570 / 1.0619	Stainless steel 1.4571 / 1.4581
Diaphragm housing	Aluminium KTL-coated	
Actuator springs	Stainless steel 1.4310	
Packing	PTFE carbon filled (spring 1.4310)	
Actuating stem	Stainless steel 1.4571 roller burnished	
Bellows (optional)	Stainless steel 1.4571	
Fixed disc	Stainless steel 1.4571 Stellit-coated	
Sliding disc	Carbon alt. STN2 alt. SFC	
Coupling ring for sliding disc	Stainless steel 1.4581	
Positioner	Aluminium anodized and polyamide	

Kvs-value - GS1

For sliding units with reduced Kvs-values, see separate Kvs data sheet, ref 4.590.
Kvs = Waterflow in m^3/h at pressure drop 1 bar and temperature +20°C at fully open valve.

DN	15	20	25	32	40	50	65	80	100	125	150
Linear	4	6,4	11	16	26	45	52	92	154	237	338
Equal percentage	1,7	3	5	8	11	19	30	48	77	116	147

Max. differential pressure - for temperatures up to +120°C - GS1

With integrated digital positioner type 804. Pressure in bar.

Sliding unit - Carbon alt SFC

Diaphragm area	125 cm^2		250 cm^2	
Supply air bar	**4**	**5,5**	**3**	**4**
DN 15	40	40	40	40
DN 20	40	40	40	40
DN 25	40	40	40	40
DN 32	40	40	40	40
DN 40	40	40	40	40
DN 50	40	40	40	40
DN 65	37	40	40	40
DN 80	23	29	40	40
DN 100	15	16	24	25
DN 125	10	11	16	16
DN 150	7	7,5	13	15
Spring configuration	3	4	3	4

Sliding unit - STN2

Diaphragm area	125 cm^2		250 cm^2	
Supply air bar	**4**	**5,5**	**3**	**4**
DN 15	40	40	40	40
DN 20	40	40	40	40
DN 25	40	40	40	40
DN 32	40	40	40	40
DN 40	26	27	27	27
DN 50	18	20	31	38
DN 65	15	16	26	31
DN 80	9	9,5	15	19
DN 100	5	5,5	9	11
DN 125	3	3,5	6	7
DN 150	2	2,5	4,5	5,5
Spring configuration	3	4	3	4

= Standard

CONTROL VALVE
AL 72-8021-GS1 / -GS3 / -GS4

Sliding unit - differential pressure and temperature limitations

Tables refers to valves with body in stainless steel PN 40. Limit for valves in carbon steel: 300°C

DN	Sliding unit - Carbon / SFC						Sliding unit - STN2					
	100°C	150°C	200°C	250°C	300°C	350°C	100°C	150°C	200°C	250°C	300°C	350°C
15 - 25	40	38	34	33	31	29	40	38	34	33	31	29
32	40	38	34	33	31	29	40	38	34	31	25	22
40	40	38	34	33	31	29	27	25	24	19	16	14
50	40	38	34	33	31	29	40	38	34	33	28	24
65	40	38	34	33	31	29	37	35	33	27	22	19
80	40	38	34	31	26	23	22	21	20	16	13	11
100	24	23	22	19	16	14	13	12	12	10	8,0	7,0
125	16	15	14	12	10	9,0	8,8	8,4	8,0	6,5	5,3	4,6
150	16	15	14	13	12	12	11	10	9,8	7,9	6,5	5,6

Dimensions

DN	ØA	C	ØD Actuator diaphragm area		L	Stroke	Weight, kg
			125 cm²	250 cm²			
15	53	460	165	222	33	6	6,9
20	62	465	165	222	33	6	7
25	72	470	165	222	33	6	7,2
32	82	475	165	222	33	6	7,5
40	92	480	165	222	33	6	7,7
50	108	490	165	222	43	8	8,9
65	127	500	165	222	46	8	9,7
80	142	510	165	222	46	8	10,3
100	164	520	165	222	52	8,5	11,8
125	194	535	165	222	56	8,5	15,5
150	219	550	165	222	56	8,5	17,4

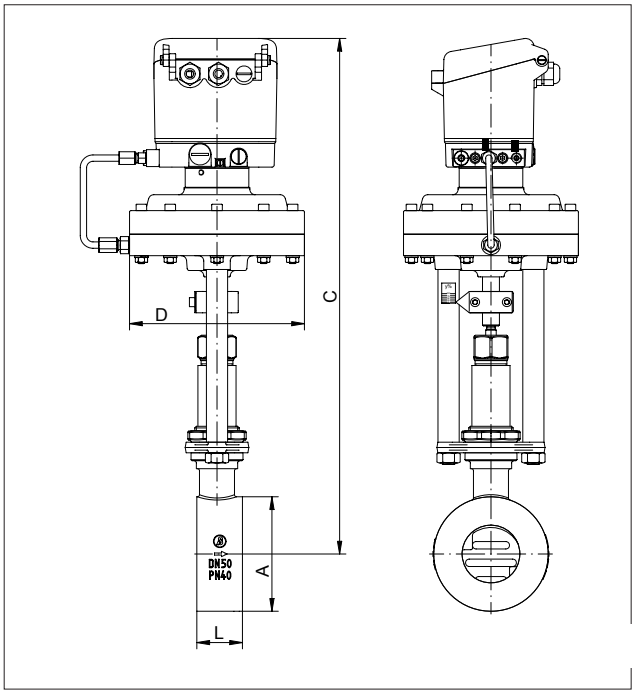

Information on request

- Media
- Application: - Inlet pressure contral valve P1
  - Admissible pressure drop
  - Media temperature
  - Flow

For selection of valves for different applications, please contact Axel Larsson.

Installation / Maintenance

The valve is designed for mounting between flanges pressure class PN 10-40. Can be installed in any position. Request separate user manual.

CONTROL VALVE
AL 72-8021-GS1 / -GS3 / -GS4

Description - GS3

AL 72-8021-GS3 is a pneumatic control valve with integrated positioner for control of neutral and aggressive fluids.

- Space saving wafer type construction
- Lowest possible weight
- Quiet operation
- Fast response time
- Control of high differential pressures with small actuators
- Greatly reduced energy consumption rates due to short strokes and low actuating forces on the throttle element
- High Kvs-values

Type GS3

Approvals - GS3

- TA-Luft TÜV Rheinland

Technical data - GS3

Design	Wafer	
Nominal sizes	DN 15-250	
Nominal sizes DIN 2401 for flanges type B	PN 40 (fits also PN 10-25)	DN 15-150
	PN 100	DN 15-80
	PN 16	DN 200-250
Fluid temperature	Carbon steel body	-10°C - +300°C
	Stainless steel body	-60°C - +350°C (+300°C for SFC)
Ambient temperature *	-30°C - +100°C	
Rangeability / characteristics	Analog positioner	30:1
	Digital positioner	40:1 linear / 80:1 equal percentage

* Please consider the limitation of use of the positioner.

Options - GS3

- Stainless steel bellow
- External I/P-converter
- Positioner (Ex ib IICT6)
- Limit switches in Ex-versions and filter regulators
- Versions for aggressive media.
- ANSI version
- AL 72-8021-GS3 high pressure max PN 100
- AL 72-8024-GS3 high pressure +530°C (extended stem)
- AL 72-8026-GS3 low pressure -200°C

Leakage - GS3

Disc pair	Carbon-stainless steel	SFC	STN2
% of Kvs	< 0,0001	< 0,0005	< 0,001
IEC 60534-4	IV-S1	IV-S1	IV
EN 12266-1	D	E	E

Part / Material specification - GS3

Part	Stainless steel	Carbon steel	
Body	Stainless steel 1.4571 / 1.4581	Carbon steel 1.0570	Carbon steel 1.0619
Head section	Stainless steel 1.4571 / 1.4581		
Diaphragm casing	Aluminium, KTL-coated		
Actuator springs	Stainless steel 1.4310		
Packing	Carbon-filled PTFE (spring 1.4310)		
Valve stem	Stainless steel 1.4571 roller burnished		
Fixed disc	Stainless steel coated		STN2 disc
Sliding disc	Special carbon material	SFC disc	STN2 disc

Other materials such as Hastelloy, Duplex, Monel, Titan, Inconel, Incoloy, 1.4539 etc. on request

CONTROL VALVE
AL 72-8021-GS1 / -GS3 / -GS4

Admissible differential pressures - with p/p and i/p positioner type 8047 - GS3

For temperatures up to 120° (contact us for higher temperatures)

Disc pair: Carbon - stainless steel coated / SFC stainless steel coated

Actuator size	**125 cm²**				**250 cm²**				**500 cm²**			
Spring range (bar)	1,5 up to 3,0		1,8 up to 3,8		1,2 up to 2,2		1,5 up to 2,7		1,2 up to 2,2		1,5 up to 2,7	
Supply air (bar)	4		5		3		4		3		4,5	
	Max. admissible differential pressure for PN 100 body (bar)											
DN	Control	On-off	Control	On-off	Control	On-off	Control	On-off	Control	On-off	Control	On-off
15	100	100	100	100	100	100	100	100	-	-	-	-
20	77	77	96	96	100	100	100	100	-	-	-	-
25	52	52	71	71	98	98	100	100	100	100	100	100
32	42	42	52	58	73	73	88	88	100	100	100	100
40	29	29	36	44	49	49	60	60	100	100	100	100
50	17	19	21	29	29	29	35	40	60	60	72	72
65	14	16	17	24	24	24	29	34	49	49	59	59
80	8	10	10	15	14	14	17	22	29	29	35	44
100	5	4	6	10	9	9	10	14	18	18	22	28
125	3	3	4	6	6	6	7	9	12	12	14	19
150	2	2	3	5	4	4	5	7	9	9	10	14
200	2	1	2	3	3	3	3	4	5	5	6	8
250	0,9	1,1	1,1	1,8	1,5	1,5	1,9	2,5	3,2	3,2	3,8	5,2
Spring configuration	3 (standard)		4		3 (standard)		4		6 (standard)		8	

Standard

Disc pair: STN 2

Actuator size	**125 cm²**				**250 cm²**				**500 cm²**			
Spring range (bar)	1,5 up to 3,0		1,8 up to 3,8		1,2 up to 2,2		1,5 up to 2,7		1,2 up to 2,2		1,5 up to 2,7	
Supply air (bar)	4		5		3		4		3		4,5	
	Max. admissible differential pressure for PN 100 body (bar)											
DN	Control	On-off	Control	On-off	Control	On-off	Control	On-off	Control	On-off	Control	On-off
15	55	55	68	70	95	95	100	100	100	100	100	100
20	37	37	46	53	64	64	78	78	100	100	100	100
25	25	26	31	40	43	43	53	55	89	89	100	100
32	7	19	22	30	30	30	36	40	62	62	75	80
40	11	13	14	20	19	19	24	27	40	40	48	58
50	6	8	8	12	11	11	13	17	23	23	27	35
65	5	6	6	10	9	9	11	14	18	18	22	28
80	3	4	4	6	5	5	6	8	11	11	13	17
100	2	2	2	3	3	3	4	5	6	6	8	10
125	-	-	2	2	2	2	3	4	4	4	5	7
150	-	-	1	2	2	2	2	3	3	3	4	5
200	-	-	-	-	-	-	-	-	-	-	-	-
Spring configuration	3 (standard)		4		3 (standard)		4		6 (standard)		8	

Standard

P. max - Upper limits for admissible pressures in bar		
PN 16	PN 40	PN 100
16	40	100

CONTROL VALVE
AL 72-8021-GS1 / -GS3 / -GS4

Admissible differential pressures - with digital positioner type 8049 - GS3

Also on-off valves and valves with other side-mounted positioner.

For temperatures up to 120° (contact us for higher temperatures)

Disc pair: Carbon - stainless steel coated / SFC stainless steel coated

Actuator size	125 cm²		250 cm²		500 cm²	
Supply air (bar)	4,5	5,5	3,0	4,0	3,0	4,5
DN	Max. admissible differential pressure for PN 100 body (bar)					
15	100	100	100	100	-	-
20	100	100	100	100	-	-
25	100	100	100	100	-	-
32	88	100	100	100	-	-
40	67	83	100	100	-	-
50	44	54	75	91	100	100
65	37	45	63	76	80	80
80	23	29	40	48	48	48
100	15	16	25	31	33	33
125	10	11	17	21	23	23
150	7	8	13	15	16	16
200	4	5	7	9	15	16
250	2,7	3,4	4,6	5,6	9,5	10,5
Spring configuration	3 (standard)	4	3 (standard)	4	6 (standard)	8

Standard

Disc pair: STN2

Actuator size	125 cm²		250 cm²		500 cm²	
Supply air (bar)	4,5	5,5	3,0	4,0	3,0	4,5
DN	Max. admissible differential pressure for PN 100 body (bar)					
15	100	100	100	100	-	-
20	81	100	100	100	-	-
25	60	75	100	100	100	100
32	45	56	77	93	100	100
40	31	38	53	64	72	72
50	18	22	31	38	64	77
65	15	18	26	31	53	62
80	9	10	15	19	32	36
100	5	6	9	11	19	23
125	3	4	6	7	13	16
150	2	3	4	5	9	11
200	-	-	-	-	-	-
Spring configuration	3 (standard)	4	3 (standard)	4	6 (standard)	8

Standard

P. max - Upper limits for admissible pressures in bar		
PN 16	PN 40	PN 100
16	40	100

CONTROL VALVE
AL 72-8021-GS1 / -GS3 / -GS4

Application limitations for valves in stainless steel - GS3

These pressure must not be exceeded for GS3-valves made of stainless steel, even though the actuator power might allow it.

PN 40

DN	Sliding unit: carbon/SFC - stainless steel, coated						Sliding unit: STN2					
	max. admissible diff. pressures for GS3-valves						max. admissible diff. pressures for GS3-valves					
	100°C	150°C	200°C	250°C	300°C	350°C	100°C	150°C	200°C	250°C	300°C	350°C
15-65	40	38	34	32	31	29	40	38	34	32	31	29
80	40	38	34	32	31	29	36	34	33	26	22	19
100	33	31	29	27	25	24	33	31	26	24	20	17
125	23	21	20	19	18	17	22	21	17	16	13	11
150	16	15	14	13	12	12	16	15	13	11	9	8
200 (PN 16 only	16	15	14	13	12	11	-	-	-	-	-	-
250 (PN 16 only)	10,5	10	9,5	8,4	7,4	6,9	-	-	-	-	-	-

PN 100

DN	Sliding unit: carbon/SFC - stainless steel, coated						Sliding unit: STN2					
	max. admissible diff. pressures for GS3-valves						max. admissible diff. pressures for GS3-valves					
	100°C	150°C	200°C	250°C	300°C	350°C	100°C	150°C	200°C	250°C	300°C	350°C
15	100	95	87	82	77	72	100	95	87	82	77	72
20	100	95	87	82	77	72	100	95	87	82	77	72
25	100	95	87	82	77	72	100	95	87	82	77	72
32	100	95	87	82	77	72	100	95	87	82	69	60
40	100	95	87	82	77	72	72	69	65	53	43	37
50	100	95	87	82	77	72	77	73	70	56	46	40
65	80	76	72	67	62	60	62	59	56	45	37	32
80	48	45	43	40	37	36	36	34	33	26	22	19

Limitation for SFC sliding discs 300°C

Ordering key - GS3

				1	2	3	4	5	6	7	8	9	10	11	12	13	14	15	16
AL 72-8021	/		V	G					M							Z			S
Valve type		DN																	

Pos 1 - 5: Please quote all 5 sections. Pos 6 - 12: Quote only if required.

1. Type		2. Body design		3. Body material		4. Safety function		5. Actuator		6. Optional		7. Spring		8. Stem sealing	
G	Pneumatic control valve with pneumatic actuator (8021)	G	GS3-flangeless design PN 10-40	0	Carbon steel 1.0570 / 1.0619	0	Spring closes	3	Diaphragm 125 cm^2	M	To state if further sections are quoted	-	Standard	-	PTFE packing self adjusting (standard)
		H	GS3-flangeless design PN 100	1	Stainless steel 1.4571 / 1.4581	1	Spring opens	4	Diaphragm 250 cm^2	A	Groove and groove DIN EN 1092-1	4	8 springs	1	Additional stainless steel bellow 1.4571 (max 33 bar)
								5	Diaphragm 500 cm^2		Groove and tongue DIN EN 1092-1	8	16 springs		

9. Sliding disc		10. Fixed disc		11. Kvs-value		12. Flow characteristics		13. Accesories		14. Positioner		15. Signaling equipment		16. Special versions	
-	Carbon	-	Stainless steel 1.4571	-	100 % (standard)	-	Linear	Z	States if further versions are quoted	-	Without	-	Without	S	Other special versions
9	STN2	1	STN2 (only in combination with pos. 9 STN2)	A	Reduc. to 63%	1	Eqaul percentage			1	p/p positioner 8047	0	2 limit switches M12x1 DC 10-30V PNP		
S	SFC			1	Reduc. to 40%					3	i/p positioner 8047				
				B	Reduc. to 25%					6	i/p positioner 8047 Ex ib IIC T6 + plug connection M12x1				
				2	Reduc. to 16%					8	i/p positioner with plug connection M12x1				
				C	Reduc. to 10%					C	digital positioner 8049, 4-wire				
				3	Reduc. to 6,3%					R	digital positioner 8049, 2-wire				
				4	Reduc. to 2,5%					T	digital positioner 8049, AS-i version				
				5	Reduc. to 1%					W	digital positioner 8049, 2-wire Ex-version				
				6	Reduc. to 20%										
				7	Reduc. to 12%										
				8	Reduc. to 2%										
				9	Reduc. to 0,4%										

CONTROL VALVE
AL 72-8021-GS1 / -GS3 / -GS4

Dimensions - with p/p and i/p positioner type 8047 - GS3

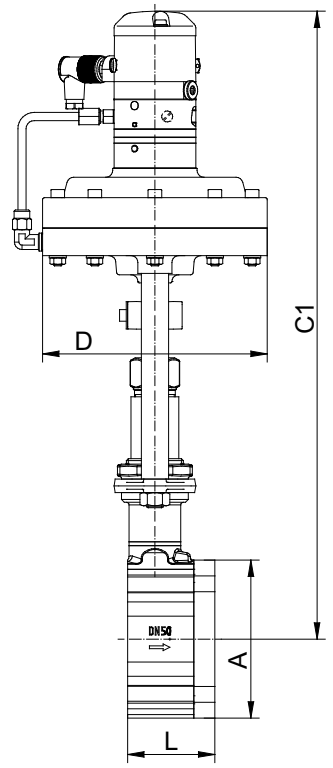

i/p positioner 8047

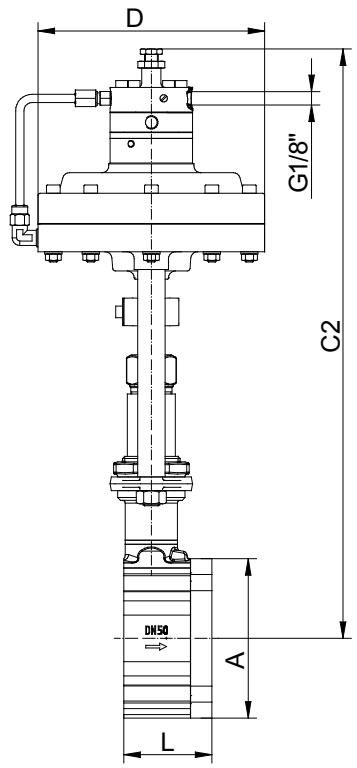

p/p positioner 8047

DN	Ø A	C1 *	C2 *	Ø D for actuator			L	Stroke	Weight kg for actuator		
				D 125	D 250	D 500			D 125	D 250	D 500
15	64	430	400	165	222	222	56	6	7,5	9,7	13,4
20	72	435	405	165	222	222	56	6	7,7	9,9	13,6
25	82	440	410	165	222	222	56	6	8,1	10,3	14,0
32	89	445	415	165	222	222	56	6	8,5	10,7	14,4
40	99	450	420	165	222	222	56	6	8,9	11,1	14,8
50	116	460	430	165	222	222	64	8	10,5	12,7	16,4
65	138	470	440	165	222	222	68	8	12,3	14,5	18,2
80	153	480	450	165	222	222	70	8	13,4	15,6	19,3
100	184	490	460	165	222	222	75	8,5	16,9	19,1	22,8
125	212	505	475	165	222	222	80	8,5	21,1	23,3	27,0
150	242	520	490	165	222	222	80	8,5	24,8	27,0	30,7
200	302	550	520	165	222	222	94	8,5	41,7	43,9	47,6
250	360	575	545	165	222	222	96	8,5	46,9	49,9	52,8

* For actuator D 500 +47,5 mm Ø

CONTROL VALVE
AL 72-8021-GS1 / -GS3 / -GS4

Dimensions - with digital positioner type 8049 - GS3

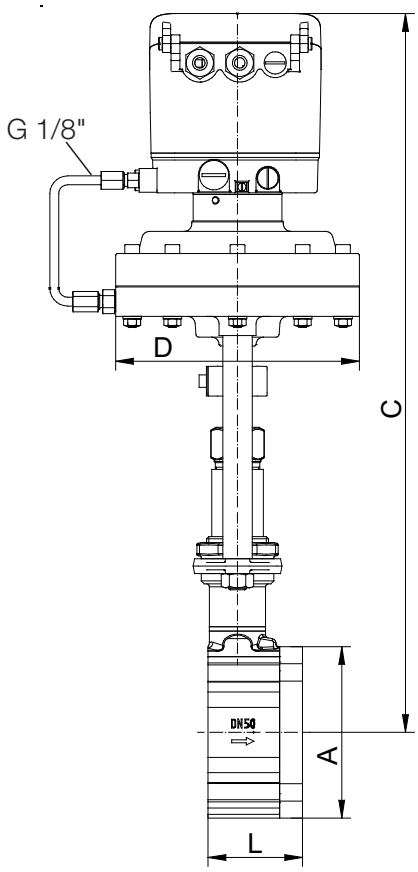

DN	Ø A	C *	Ø D for actuator			L	Stroke	Weight kg for actuator		
			D 125	D 250	D 500			D 125	D 250	D 500
15	64	460	165	222	222	56	6	7,5	9,7	13,4
20	72	465	165	222	222	56	6	7,7	9,9	13,6
25	82	470	165	222	222	56	6	8,1	10,3	14,0
32	89	475	165	222	222	56	6	8,5	10,7	14,4
40	99	480	165	222	222	56	6	8,9	11,1	14,8
50	116	490	165	222	222	64	8	10,5	12,7	16,4
65	138	500	165	222	222	68	8	12,3	14,5	18,2
80	153	510	165	222	222	70	8	13,4	15,6	19,3
100	184	520	165	222	222	75	8,5	16,9	19,1	22,8
125	212	535	165	222	222	80	8,5	21,1	23,3	27,0
150	242	550	165	222	222	80	8,5	24,8	27,0	30,7
200	302	580	165	222	222	94	8,5	41,7	43,9	47,6
250	360	605	165	222	222	96	8,5	46,9	49,1	52,8

* For actuator D 500 +47,5 mm Ø

CONTROL VALVE
AL 72-8021-GS1 / -GS3 / -GS4

Description - GS4

AL 72-8021-GS4 is a pneumatic control valve with integrated digital positioner for control of neutral and aggressive fluids.

- Space saving wafer type construction
- Compact version, low weight
- Quiet operation
- High dynamic because of small stroke
- Control of high differential pressures with small actuators
- Low energy consumption
- High Kvs-values
- Long lifetime also with cavitation operation

Type GS4

Options - GS4

- Bellow
- Stroke feedback
- Positioner (Ex ib IIC T6)

Technical data - GS4

Design	Wafer-type design for flanges DIN EN 1092-1 Form B	
Nominal sizes *	DN 25-250	
Nominal sizes DIN 2401	PN 160	DN 25-80
	PN 100	DN 100-150
	PN 40	DN 200-250
Mounting position	Any mounting position for installation in horizontal pipes. Not in rising pipes.	
Fluid temperature **	-60°C - +350°C	
Ambient temperature ***	-30°C - +100°C	
Rangeability / characteristics	Digital positioner: 80:1 equal percentage	

* Other pressure ratings on demand
** Higher temperatures on demand
*** Please consider the temperature limitation of the positioner!

Leakage - GS4

Disc pair	STN2
% of Kvs	< 0,001
IEC 60534-4	IV
EN 12266-1	E
Specific leakage rate shaft and body sealing	ISO FE-BH-CC3-SSA0-t (-40°C - +350°C) -PN40-ISO 15848-1

Part / Material specification - GS4

Part	Material
Body	Stainless steel 1.4571
Head section	Stainless steel 1.4571
Diaphragm casing	Aluminium, KTL-coated
Actuator springs	Stainless steel 1.4310
Packing	Carbon-filled PTFE (spring 1.4310)
Valve stem	Stainless steel 1.4122 or 1.4571 roller burnished
Fixed disc	STN2 disc
Sliding disc	STN2 disc

Other materials such as Hastelloy, Duplex, Monel, Titan, Inconel, Incoloy, 1.4539 etc. on request

CONTROL VALVE
AL 72-8021-GS1 / -GS3 / -GS4

Admissible differential pressures - with digital positioner type 8049 - GS4

Also on-off valves and valves with other side-mounted positioner.

For temperatures up to 120° (contact us for higher temperatures)

Disc pair: STN2

Actuator size	1000 cm²			1500 cm²		
Supply air (bar)	3,8	4,9	5,5	3,4	4	4,3
DN	Max. admissible differential pressure for PN 100 body (bar)					
25	160	160	160	160	160	160
50	115	159	160	160	160	160
80	61	84	93	87	102	112
100	39	53	59	55	65	71
150	19	26	29	27	32	35
200	11	15,5	17	16	18,5	20
250	6,9	9,6	10,5	9,9	11,5	12,5
Spring configuration	Code L	Code "-"	Code P	Code L	Code "-"	Code P

Standard

Application limitations for valves in stainless steel - GS4

These pressure must not be exceeded for GS-valves from the GS4-series made of stainless steel, even though the actuator power might allow it. Applications for dangerous gases acc. pressure equipment directive 2014/68/EU category III (DN > 100; PS x DN > 3500) only after consultation.

PN 160

DN	Sliding unit: SFC - stainless steel, coated						Sliding unit: STN2					
	max. admissible diff. pressures for GS4-valves						max. admissible diff. pressures for GS4-valves					
	100°C	150°C	200°C	250°C	300°C	350°C	100°C	150°C	200°C	250°C	300°C	350°C
25	160	147	127	115	104	-	160	147	127	115	104	98
50	160	147	127	115	104	-	160	147	127	115	104	98
80	160	147	127	115	104	-	160	147	127	115	104	98

PN 100

DN	Sliding unit: SFC - stainless steel, coated						Sliding unit: STN2					
	max. admissible diff. pressures for GS4-valves						max. admissible diff. pressures for GS4-valves					
	100°C	150°C	200°C	250°C	300°C	350°C	100°C	150°C	200°C	250°C	300°C	350°C
100	100	92	79	72	65	-	100	92	79	72	65	61
150	100	92	79	72	65	-	100	92	79	72	65	24

PN 40

DN	Sliding unit: SFC - stainless steel, coated						Sliding unit: STN2					
	max. admissible diff. pressures for GS4-valves						max. admissible diff. pressures for GS4-valves					
	100°C	150°C	200°C	250°C	300°C	350°C	100°C	150°C	200°C	250°C	300°C	350°C
200	40	36	31	28	26	-	38	36	31	28	26	24
250	40	36	31	28	26	-	23	23	23	19	17	14

CONTROL VALVE
AL 72-8021-GS1 / -GS3 / -GS4

Dimensions - with digital positioner type 8049 - GS4

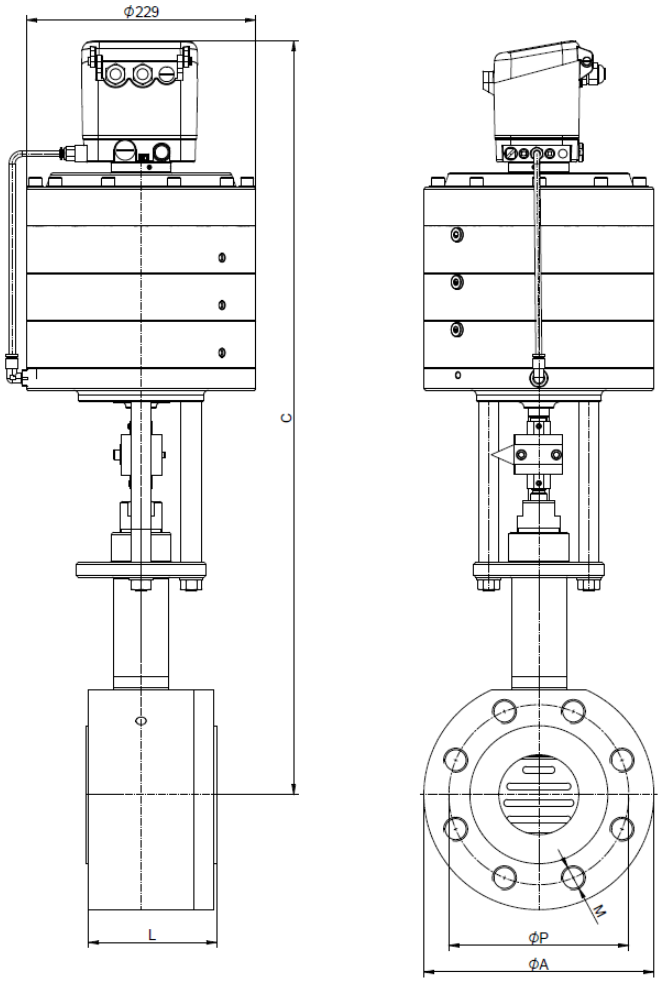

DN	Ø A	C for actuator		PN	Ø P	No of screws	M	L	Stroke	Weight kg for actuator	
		D 100	D 1500							D 1000	D 1500
25	135	715	-	160	100	4	M16	83	6	33	-
50	186	720	-	160	145	4	M24	92	8	40	-
80	230	755	-	160	180	8	M24	131	8	60	-
100	260	770	865	100	210	8	M27	152	8,5	75	82
150	375	875	970	100	290	12	M30	194	8,5	155	162
200	420	895	990	40	320	12	M27	146	8,5	145	152
250	450	915	1010	40	385	12	M30	156	8,5	160	167

* For actuator D 500 +47,5mm Ø

CONTROL VALVE
AL 72-8021-GS1 / -GS3 / -GS4

Kvs value - GS1 / GS3 / GS4

Sliding discs with alternative Kvs values.

Kvs = Water flow in m^3/h at pressure drop 1 bar and temperature +20°C at fully open valve.

DN	Charact.	100%	63%	40%	25%	20%	16%	12%	10%	6,3%	2,5%	2%	1%	0,4%
15	(mod.) linear	4	2,6	1,7	1,4	-	0,71	0,49	0,44	0,26	0,14	0,08	0,04	-
	eq. perc.	1,7	-	1,1	-	-	-	-	-	0,1	-	-	-	-
20	(mod.) linea	6,4	-	-	-	-	1	-	-	-	-	0,125	-	-
	eq. perc.	3	-	-	-	-	-	-	-	-	-	-	-	-
25	(mod.) linea	11	6,4	4	-	-	1,6	-	0,93	0,62	-	-	0,14	0,04
	eq. perc.	5	-	2,4	-	1,1	-	-	-	-	-	-	-	-
32	(mod.) linea	16	10	-	-	-								
	eq. perc.	8	-	-	-	-								
40	(mod.) linea	26	16	11	7	-								
	eq. perc.	11	8,5	-	2,75	-								
50	(mod.) linea	45	28	20	12	10								
	eq. perc.	19	12	-	-	-								
65	(mod.) linea	52	35	-	-									
	eq. perc.	30	-	-	8									
80	(mod.) linea	92	58	40										
	eq. perc.	48	35	-										
100	(mod.) linea	154	95	62										
	eq. perc.	77	48	-										
125	(mod.) linea	237	-	95										
	eq. perc.	116	-	-										
150	(mod.) linea	338	212	-										
	eq. perc.	147	90	-										
200	(mod.) linea	560	352	-										
	eq. perc.	-	-	-										
250	(mod.) linea	910												
	eq. perc.	-												

AXEL LARSSON
Telephone +46 10 455 97 00 • sales@axel-larsson.se • www.axel-larsson.se
Head Office: Truckvägen 12, P.O. Box 805, SE-194 28 Upplands Väsby (Stockholm), Sweden.

Design and specifications subject to change without prior notice.